iVeriPHY Mil1394 Handheld Test Module

IEEE-1394b Bus/Node Monitor and Tester System

Applications

Testing of point-to-point IEEE-1394b wire harness cable connections

Testing of IEEE-1394b network (wire harness and devices) connectivity

Testing of point-to-point bit error rate and network bus error rate

Verification of IEEE-1394b bus topology with node ID number and initiated bus reset support

Monitor IEEE-1394b bus for missing AS5643 messages

Testing in space-constrained areas using handheld tester vs test cart

Benefits

Standalone IEEE-1394b network tester; No external PC required

Scalable Application support: Monitor, Topology Viewer, Bus Error Rate Tester, Capture, and Aircraft Representative Topology

Quickly determine wire harness and LRU connectivity issues through monitoring of port connectivity, bit error, bus error and topology information enabling fault-isolation in the network

Monitoring of IEEE-1394b bus topology, traffic activity and bus resets to help diagnose network level issues

Features

Integrated touchscreen provides standalone IEEE-1394b network tester with no external PC required

Monitor application provides low-level point-to-point connectivity diagnostic information and bus-level node count, bus reset count, and activity indicator

Topology Viewer application provides 1394b bus topology with parent/child and port connection information along with Self-IDs, Node ID, Link Active and Initiate last bus reset

Using the Bus Error Rate Tester (BERT) application, two VeriPHYs can verify the bus error rate between point-to-point connections or through a multi-node topology and log the test results

Capture application provides recording of packets for up to five AS5643 ASM Message IDs

Aircraft Representative Topology application provides monitoring of traffic to identify extraneous bus resets or missing messages based on AS5643 heartbeat

Three (3) S200β and S400β capable transformer isolated ports

Overview

Designed to provide both point-to-point and network diagnostic information, the iVeriPHY Tester is a single node (channel) standalone IEEE-1394b bus tester with three (3) transformer-coupled S200β and S400β beta-only ports. Each port connects to the 1394b bus through a 4-pin latching Lemo connector. Test and Diagnostic applications are accessed through the integrated 7-inch backlit touchscreen.

The iVeriPHY is a scalable platform, available as a standalone unit or as a two iVeriPHY kit. The platform base configuration includes the “Monitor” application that provides the user both wire harness and 1394b network diagnostic information.

In addition to the "Monitor" application, the iVeriPHY’s scalable platform supports optional applications such as the “Bus Error Rate Tester” (BERT), “Topology Viewer”, and others to provide additional test and diagnostic capability to meet our customers’ needs. The customer may purchase these additional software applications.

These and future-planned applications provide customer-specific features and user experience enhancements to abstract low-level IEEE-1394b/AS5643 data and allow users to view diagnostic and test data information from an air vehicle point of view.

> iVeriPHY Handheld Test Module

iVeriPHY Mil1394 Handheld Test Module

Expandable IEEE-1394b Bus/Node Monitor and Tester System

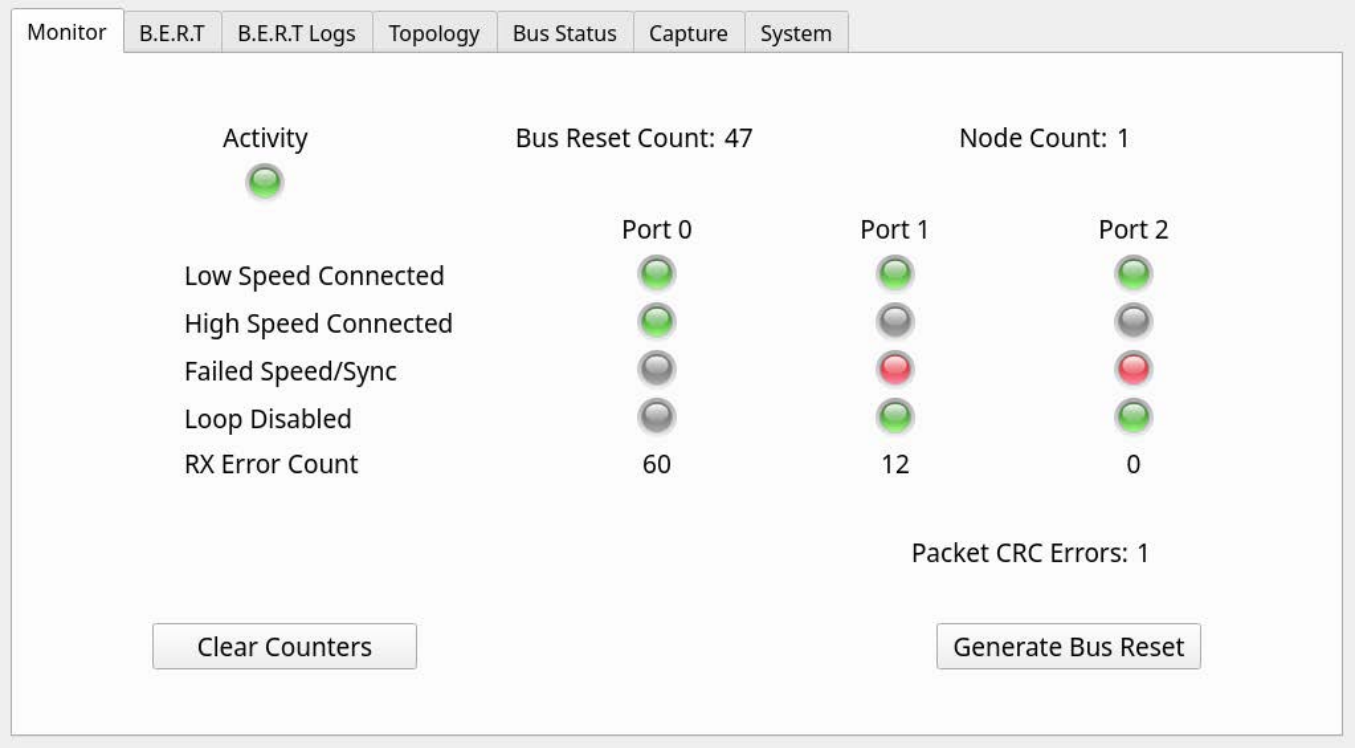

> **iVeriPHY Monitor Application**

Base Configuration

The iVeriPHY Base Configuration includes both the iVeriPHY hardware and Monitor software application that provide both wire harness diagnostics and 1394b network information. The tester displays the following diagnostic information:

Cable Connection Information:

- Low Speed Connection (Toning)
- High Speed Connection (8b10b)
- Speed negotiation or Synchronization failed
- Loop Disabled
- Rx Error Count

1394b Network Information:

- Activity
- Bus Reset Count
- Node Count

Additional software applications are offered that increase the utility of iVeriPHY beyond the base configuration. Learn more about these options on pages 3 through 7.

iVeriPHY Mil1394 Handheld Test Module

Expandable IEEE-1394b Bus/Node Monitor and Tester System

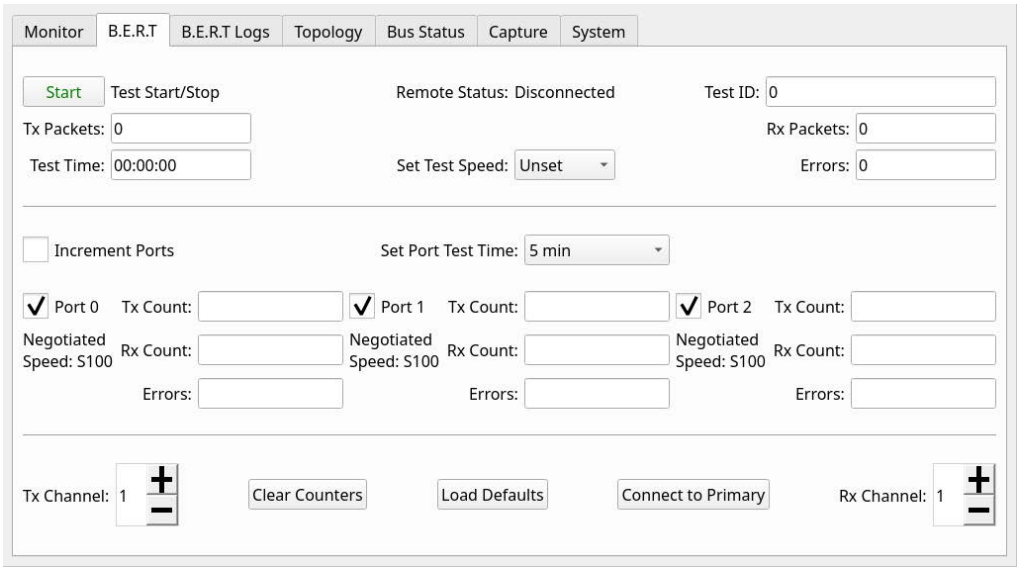

> **iVeriPHY BERT Application**

BERT Application (Add-on)

The Bus Error Rate Tester (BERT) application's primary purpose is validation of a wire harness and any intermediate repeating nodes (devices) ability to transmit and receive IEEE-1394b communications. Two primary use cases for BERT are: 1) Point-to-Point 2) Network.

1) In the Point-to-Point case often all 1394b ports implemented in the wire harness cable need to be tested. Because 1394b only allows a single active port between two nodes, the other ports transition to the loop disabled state. Being able to disable and enable each iVeriPHY port (Increment Ports) mode is required to test each of up to three (3) ports with only two VeriPHYs and without manually moving the port-to-port connection.

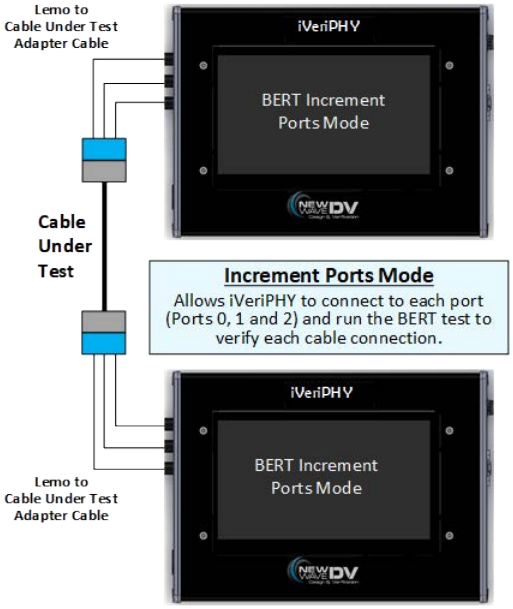

2) In the Network case often a complete 1394b bus path is being validated. In this case a iVeriPHY is placed at each end of the bus path being validated. If there are multiple bus paths additional iVeriPHYs could be used to test each path simultaneously. Additional repeating nodes (iVeriPHYs/iRepeaters or actual/ simulated air vehicle modules) are used to repeat the packets throughout the topology being tested.

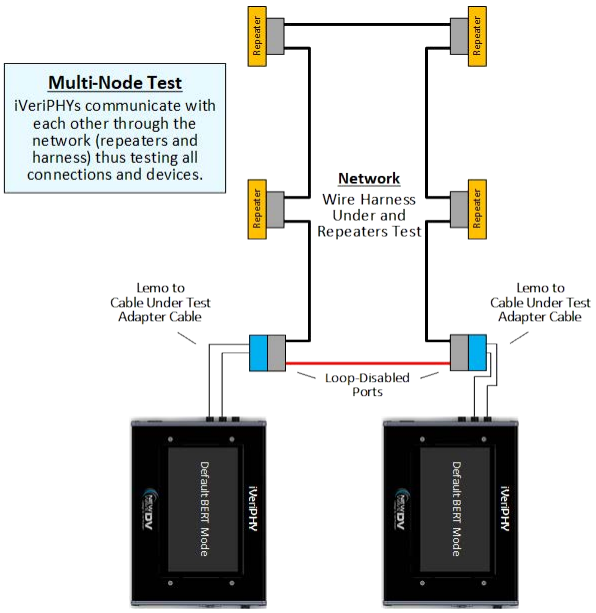

iVeriPHY Mil1394 Handheld Test Module

Expandable IEEE-1394b Bus/Node Monitor and Tester System

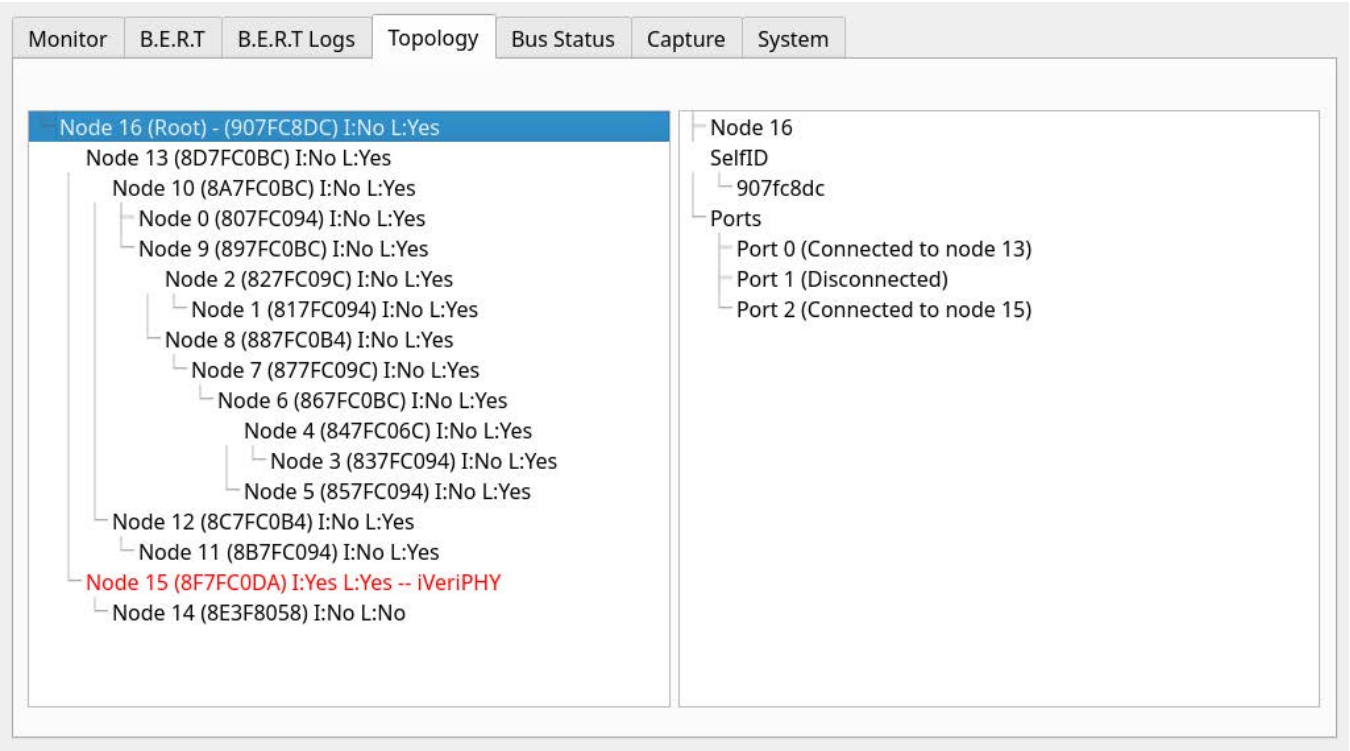

> **iVeriPHY Topology Viewer Application**

Topology Viewer Application (Add-on)

The Topology Viewer Application provides the user a graphical representation of the 1394b bus (network) the iVeriPHY is connected to. IEEE-1394b is a tree architecture bus with each node (device) having a parent/child relationship with the other nodes on the bus.
The Topology Viewer displays the following information for the current 1394b bus topology:

- Port Connection/Parent-Child relationship is be used to create the topology structure.
  - The largest Physical ID node (Root) is on the top of the topology structure.
  - The Parent is always indented less (more to the left) than Child (more to the right)

- Each node in the topology is separately displayed with the following information:
  - Node - Physical ID
  - First quadlet of the self-ID packet for that node
  - I: Did this node Initiate the last Bus Reset (Yes or No)
  - L: Is Link Active (Yes or No)
  - iVeriPHY node is indicated to provide relative location to other nodes on the bus

- Selecting a node displays in the right pane the details of that node including the physical port connections.

iVeriPHY Mil1394 Handheld Test Module

Expandable IEEE-1394b Bus/Node Monitor and Tester System

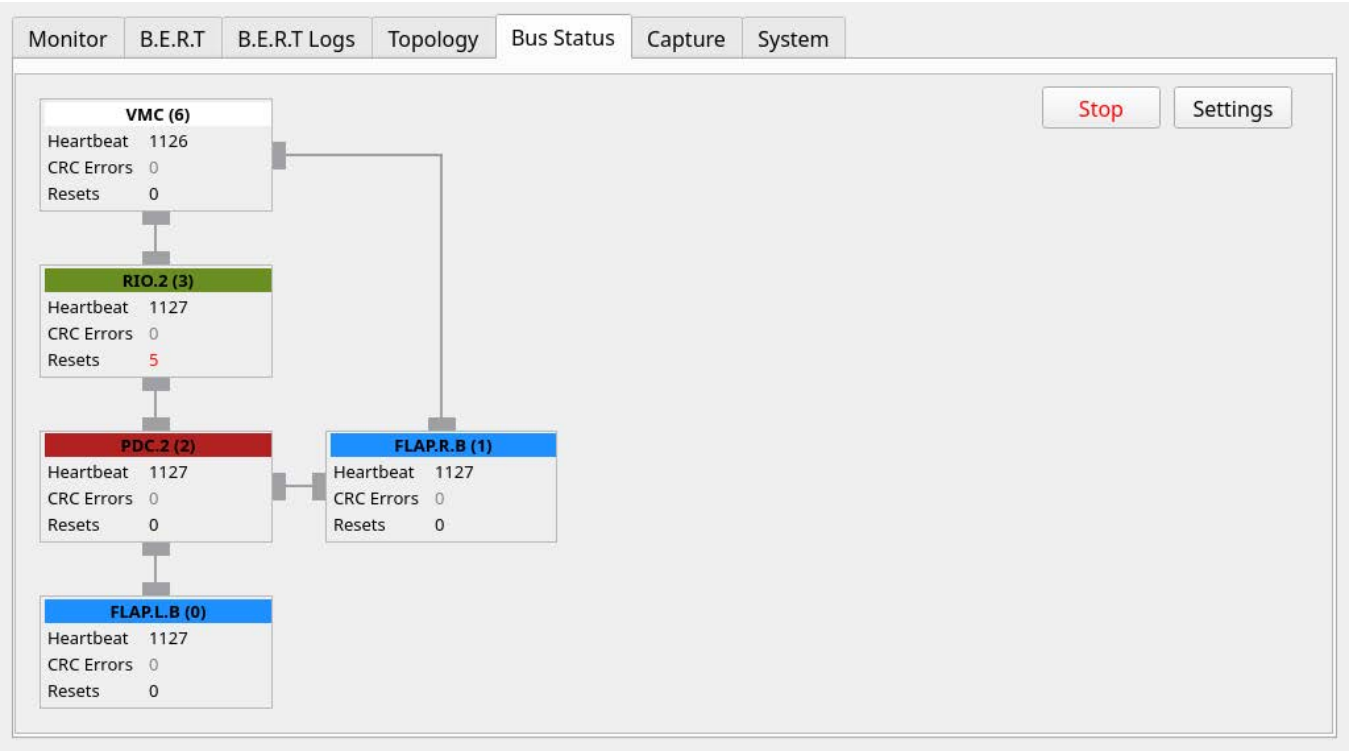

> **Aircraft Representative Topology Application**

Aircraft Representative Topology Application (Add-on)

The Aircraft Representative Topology Application (FW-FC1-ARTOP) is designed to monitor the bus of a vehicle and assist in identifying problem connections or components. User defined configuration files provide the expected topology and Asynchronous Subscriber Messages (ASM) Message IDs which are transmitted by each node in the topology. Configuration files are text-based in the industry standard JavaScript Object Notation (JSON) format.

In the configuration file the user may define the name and color of each node. The IEEE-1394b Node ID is displayed in the title bar of the node as well. While running the Aircraft Representative Topology application monitors the heartbeat field in the ASM messages on the bus. When a configurable number of heartbeats are missed, the count will turn red indicating a possible communication issue with that node.

In addition to the heartbeat the Aircraft Representative Topology application tracks which nodes are generating bus resets. When a configurable number of bus resets have occurred, the count will turn red to indicate a possible issue with that node or its wiring. A future release will identify ASM messages with CRC errors as well.

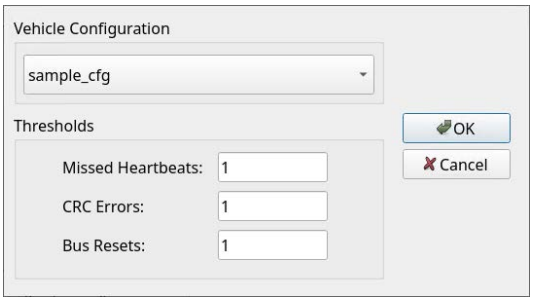

> Aircraft Representative Topology Settings

iVeriPHY Mil1394 Handheld Test Module

Expandable IEEE-1394b Bus/Node Monitor and Tester System

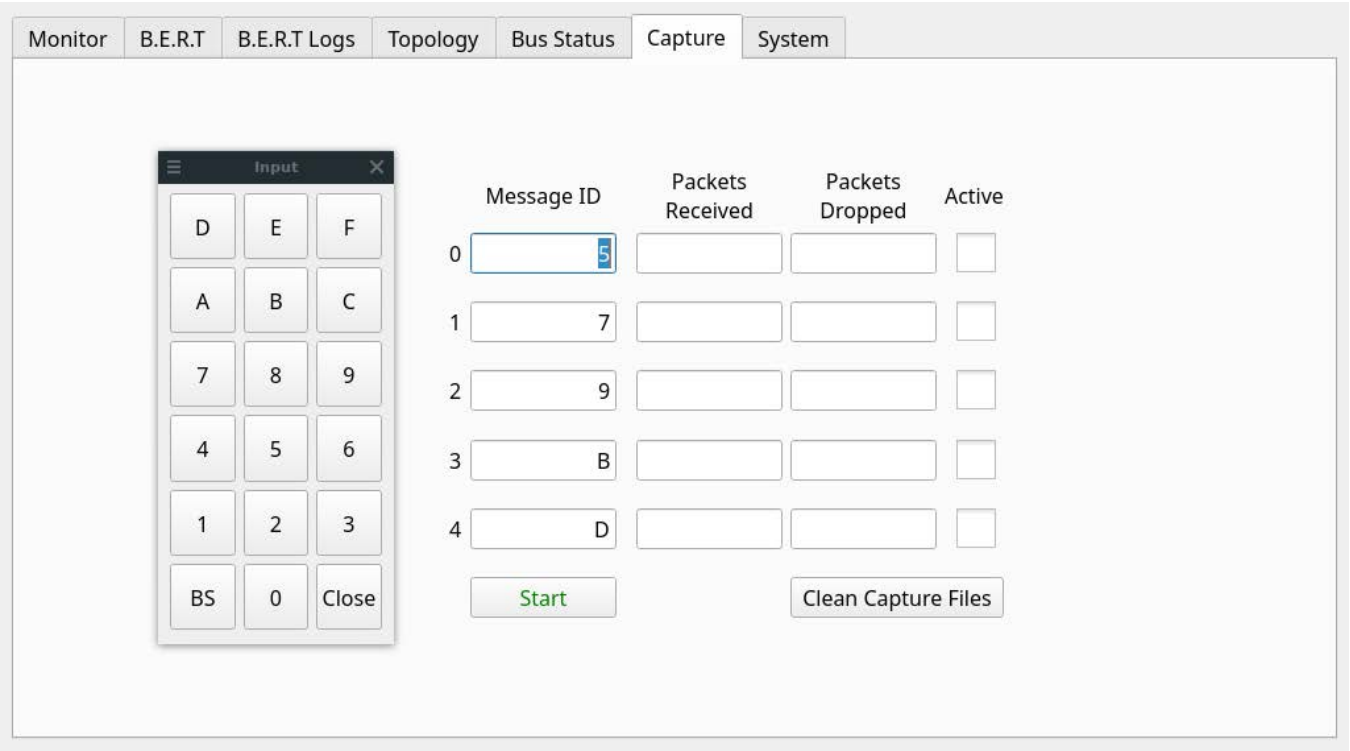

> **iVeriPHY Capture Application**

Capture Application (Add-on)

The Capture Application (FW-FC1-5REC) allows the user to specify up to five (5) AS5643 Asynchronous Subscriber Messages (ASM) to be captured by the iVeriPHY per frame. Number of messages recorded per frame, packet size and frame rate are limited to minimize potential packet loss. The intuitive user interface (UI) allows the Message IDs to be input and enabled. Once the capture is started, the iVeriPHY with Capture Application listens and records the ASM with matching Message IDs and provides the user message count status information.

The capture file format is designed to be easily parsed by software after being downloaded from the iVeriPHY via Ethernet. The downloaded capture file can be post processed to perform the required data examination.

Key Benefits of Capture Application Add-on:

- Allows the iVeriPHY to record up to five ASM messages per frame
- Capture status provide the user real-time number of messages recorded information to help determine event coverage
- Adds an additional limited record application to the ever expanding iVeriPHY application offering
- Capture files are easily downloaded for inspection and post processing via an Ethernet connection

iVeriPHY Mil1394 Handheld Test Module

Expandable IEEE-1394b Bus/Node Monitor and Tester System

Complete Product Support Program

New Wave DV prides itself on its excellent customer support, a fact that is echoed by our customers. New Wave DV provides industry standard warranty on its products, but it is the human factor that makes our support so valuable to our customers. Our team takes the time and effort to ensure that the customer experience with our products is a positive one.

Our Commitment

New Wave DV is committed to providing the latest innovations in technology, architectures, and techniques to keep our customers one step ahead of the rest. Our products, complete with the Development Framework, are intended to offer our customers an entirely unique out-of-the-box experience.

Technical Specifications

CONNECTORS
Three (3) 4-pin Lemo connectors providing three (3) transformer-isolated IEEE-1394b Beta ports.

RJ-45 Ethernet Connector

5 VDC Power Connector

DATA RATE SUPPORT
IEEE-1394b S200β and S400β
100Mb/1Gb Ethernet

WEIGHT
iVeriPHY Unit Weight: 3.2 lbs (1.45 kg)

DIMENSIONS
8.66” x 6.51” x 2” (220mm x 165mm x 55mm)

TEMPERATURE
Operating: 32°F (0°C) to 104°F (40°C)
Storage: -4°F (0°C) to 158°F (70°C)

Ordering Information

FW-FC1-400T: iVeriPHY 1394b Wire Harness and Network Tester with 5V AC adapter, Ethernet cable, and User Guide.

FW-FC1-400T-KIT: The KIT includes two FW-FC1-400T units with carrying case.

Add-on Applications

FW-FC1-BERT: Bus Error Rate Tester Software Application

FW-FC1-TOP: Topology Viewer Software Application

FW-FC1-5REC: Capture Application

FW-FC1-ARTOP: Aircraft Representative Topology Application

Optional Accessories

490-00014: Endcap Bumpers and Battery Kit

490-00015: IEEE-1394b 9-pin Male Crossover to Male 4-pin LEMO (1M)

FOR MORE INFORMATION:

www.newwavedv.com
info@newwavedv.com
Phone +1 952-224-9201

New Wave DV
10260 Viking Drive, Ste 250
Eden Priarie, MN 55344 USA